ICC-ES Evaluation Report

ESR-2190

Reissued June 2026

Revised September 2026

This report remains under an active continuous compliance program through the end of June 2028.

This report also contains:

- **City of LA Supplement**
- **CA Supplement**
- **FL Supplement w/ HVHZ**

ICC-ES Evaluation Reports are not to be construed as representing aesthetics or any other attributes not specifically addressed, nor are they to be construed as an endorsement of the subject of the report or a recommendation for its use. There is no warranty by ICC Evaluation Service, LLC, express or implied, as to any finding or other matter in this report, or as to any product covered by the report.

Copyright © 2026 ICC Evaluation Service, LLC. All rights reserved.

DIVISION: 06 00 00—WOOD, PLASTICS AND COMPOSITES Section: 06 05 23—Wood, Plastic, and Composite Fastenings	REPORT HOLDER: MITEK® INC.	EVALUATION SUBJECT: MITEK SHRINKAGE COMPENSATION DEVICES: CNX AND CNXO CINCH NUT™ AND PW3	

1.0 EVALUATION SCOPE

Compliance with the following codes:

- 2024, 2021, 2018, 2015 and 2012 *International Building Code®* (IBC)
- 2024, 2021, 2018, 2015 and 2012 *International Residential Code®* (IRC)

Property evaluated:

- Structural

2.0 USES

The shrinkage compensation devices described in this report are used in conjunction with hold-down and tension-tie connectors, as part of a restraint system in wood-frame construction, to remove slack from the system by compensating for shrinkage and settlement of the wood framing.

3.0 DESCRIPTION

3.1 CNX and CNXO Cinch Nuts Shrinkage Compensation Devices:

The Cinch Nut is a prefabricated assembly consisting of a housing, four internally threaded ratcheting nut quadrants with springs in the top of each quadrant, an internal C-ring, and either a housing top and bottom (CNX models) or omega-shaped housing top (CNXO models). The housing is a hollow cylindrical piece containing the nut quadrants. The nut quadrants are bound together by the spring-like internal C-ring within the housing. For CNX models, the housing top and bottom are plates that are attached to the top and bottom of the housing with two screws. For CNXO models, the housing is press fit within the omega-shaped housing top. See Figures 1, 2 and 3.

The Cinch Nut is installed on a threaded anchor rod and fastened to the wood framing of the structure. As the wood framing members shrink or settle the Cinch Nut ratchets downward along the axis of the threaded anchor rod without transferring any appreciable force into the anchor rod. When an uplift force is applied, the Cinch Nut engages and transfers a tensile force to the anchor rod and a bearing force through a steel bearing plate into the wood framing. The CNX3/CNXO3, CNX4/CNXO4, CNX5/CNXO5, CNX6/CNXO6, CNX7/CNXO7, CNX8/CNXO8, CNX9/CNXO9, CNX10/CNXO10, CNX11/CNXO11, and CNX12/CNXO12 models are designed, respectively, for $^3/_8$-inch-, $^1/_2$-inch-, $^5/_8$-inch-, $^3/_4$-inch-, $^7/_8$-inch-, 1-inch-, $1^1/_8$-inch-, $1^1/_4$-inch-, $1^3/_8$-inch-, and $1^1/_2$-inch-diameter (9.5 mm, 12.7 mm, 15.9 mm, 19.1 mm, 22.2 mm, 25.4 mm, 28.6 mm, 31.7 mm, 34.9 mm, and 38.1 mm) threaded rods. See Figure 1 for dimensions of each model.

3.2 PW3 Shrinkage Compensation Device:

The PW3 is a ratcheting device consisting of a bearing plate supported by an expanding washer. Combined with the MiTek WSF screw (ESR-2761), the PW3 is used to resist uplift loads at the floor levels. See Table 2 for dimensions of the PW3 Shrinkage Compensation Device.

3.3 Materials:

3.3.1 CNX and CNXO Cinch Nuts: The CNX Cinch Nut housing is manufactured from Chinese standard GB3077-88, 35CrMo steel, with a hardness of Rockwell 25-38 C, and the housing top and bottom are manufactured from Chinese standard GB-T700-2006, Q235 steel, with a minimum hardness of Rockwell 45 B. The CNXO housing is manufactured from Chinese standard Q/BQB 408 2019 SPCC steel. The internally threaded nut quadrants are manufactured from Chinese standard GB3077-88, 35CrMo steel, with a hardness of Rockwell 30-40 C. The internal C-ring is manufactured from Chinese standard GB700-88 65Mn steel wire. The compression springs in the tops of the nut quarters are manufactured from Chinese standard GB4357-89 steel. Each of these parts has a zinc-plated finish, with the exception of the internal C-ring and compression springs.

3.3.2 Threaded Rod: Threaded rod used with the Cinch Nut must comply with the applicable code and the thread specifications noted in Table 1.

3.3.3 PW3 Compensation Device: The PW3 body and internal components are made from a glass fiber reinforced polyamide thermoplastic which is suitable for structural applications subjected to high static loads over long periods of time. The bearing plate is made from 7-gauge ASTM A653 grade 40 steel, or equivalent, with a minimum yield strength of 40,000 psi and a design thickness of 0.180 inch (4.57 mm).

4.0 DESIGN AND INSTALLATION

4.1 CNX and CNXO Cinch Nut:

The Cinch Nut is installed by inserting it over, and sliding it downward along, the threaded anchor rod until it rests on top of the bearing plate or hold-down device. The Cinch Nut must be positioned on the threaded rod such that the threaded rod extends a minimum of two full-thread pitches above the plane formed by the top surface of the Cinch Nut. The Cinch Nut must then be attached to the wood framing such that it maintains tight contact with the bearing plate as the wood framing shrinks or settles. Cinch Nuts used in plated systems must be secured into position through the steel bearing plate to the top of the wood sill plate or top plate using two $^1/_4$-inch-by-3-inch (6.4 mm by 76 mm) lag screws, as shown in Figures 2 and 3. Lag screws must be installed in accordance with applicable provisions of the ANSI/AWC *National Design Specification® for Wood Construction* (NDS). The threaded rod with which the Cinch Nut is used must be installed plumb, such that the offset angle between the top of the floor and the bottom of the top plates or bridge block above does not exceed 2.0 degrees from vertical. The Cinch Nut has an unlimited shrinkage and/or settling compensation capacity, provided there are no obstructions or discontinuities, such as couplers, located within the expected range of movement along the threaded rod.

Allowable loads, deflection at allowable loads, and average travel and seating increments, Δ_R, for Cinch Nuts are given in Table 1. The design of other elements within the restraint system, including threaded rods, bearing plates, anchors, and wood framing members, must be performed by others to the satisfaction of the code official.

4.2 PW3 Shrinkage Compensation Device:

The PW3 ships with a shipping plug through the center hole that must be removed before product installation. The WSF screw (ESR-2761) installs through the center hole of the PW3 and is driven through the wall bottom plate, floor sheathing and wall cavity into the top plates of the wall below. The WSF screw must be driven in until the head of the screw compresses the PW3 which releases the internal spring to activate the device. The PW3 has a compensation capacity of $^5/_{16}$ inch (8 mm).

Allowable loads, deflection at applied loads, and average travel and seating increments, Δ_R, for the PW3 Shrinkage Compensation Device are given in Table 2.

5.0 CONDITIONS OF USE:

The shrinkage compensation devices described in this report comply with, or are suitable alternatives to what is specified in, those codes listed in Section 1.0 of this report, subject to the following conditions:

5.1 The devices must be manufactured and identified in accordance with this report.

5.2 The devices must be installed in accordance with this report, the manufacturer's published installation instructions and the plans approved by the code official. In the event of a conflict between this report and the manufacturer's published installation instructions, this report governs.

5.3 The design values given in this report are for the Cinch Nut and PW3 devices alone. Calculations, demonstrating that the design loads do not exceed the allowable loads, must be submitted to the code official for approval. The calculations must be prepared by a registered design professional when required by the statutes of the jurisdiction in which the project is to be constructed.

5.4 When using the basic allowable stress design load combinations in accordance with IBC Section 1605.1 (Section 1605.3.1 of the 2018, 2015, and 2012 IBC), or the alternative allowable stress design load combinations in accordance with IBC Section 1605.2 (Section 1605.3.2 of the 2018, 2015, and 2012 IBC), allowable loads are not permitted to be increased for wind or earthquake loading. No increase in allowable loads or reduction of applied loads for wind or earthquake is allowed when design uses the IRC.

5.5 The devices are limited to installations in dry, interior locations.

5.6 Use of the devices in contact with preservative-treated wood is outside of the scope of this report.

5.7 The devices must not be used to support any dead load other than its own weight.

5.8 When the devices are used in continuous rod systems that resist light-frame shear wall overturning forces, calculations shall be submitted to the code official confirming that the total vertical displacement, which would include steel rod elongation and the shrinkage compensating device deflection, is less than or equal to 0.200-inch (5 mm) for each story, or between restraints, whichever is more restrictive, using allowable stress design (ASD). Shear wall drift limit calculations shall consider the 0.200-inch (5 mm) vertical displacement limit. This 0.200-inch (5 mm) vertical displacement limit may be exceeded when it can be demonstrated that the shear wall story drift limit and the deformation compatibility requirements of IBC Section 1604.4 are met when all sources of vertical displacement are considered.

6.0 EVIDENCE SUBMITTED

Data in accordance with the ICC-ES Acceptance Criteria for Shrinkage Compensating Devices (AC316), dated October 2022 (Editorially revised June 2024).

7.0 IDENTIFICATION

7.1 The ICC-ES mark of conformity, electronic labeling, or the evaluation report number (ICC-ES ESR-2190) along with the name, registered trademark, or registered logo of the report holder must be included in the product identification.

7.2 In addition, Cinch Nuts and PW3s are packaged in boxes with labels identifying the report holder name (MiTek), the model number, and the evaluation report number (ICC-ES ESR-2190). For the Cinch Nut, each individual component, other than the bottom, C-ring and compression ring, bears a stamp identifying the lot number, and the housing top bears additional stamps identifying the model number and the evaluation report number (ICC-ES ESR-2190). Each individual PW3 is identified with a label that includes the MiTek designation, the product model (stock) number and the ICC-ES evaluation report number (ICC-ES ESR-2190).

7.3 The report holder's contact information is the following:

MITEK® INC.
16023 SWINGLEY RIDGE ROAD
CHESTERFIELD, MISSOURI 63017
1-800-325-8075
www.mitek-us.com
www.hardyframe.com

TABLE 1—THREAD SPECIFICATIONS, ALLOWABLE LOADS, AND DEFLECTION AT ALLOWABLE LOADS FOR CINCH NUTS

PARAMETER	CINCH NUT MODEL DESIGNATION									
	CNX3	CNX4	CNX5	CNX6	CNX7	CNX8	CNX9	CNX10	CNX11	CNX12
	CNXO3	CNXO4	CNXO5	CNXO6	CNXO7	CNXO8	CNXO9	CNXO10	CNXO11	CNXO12
Thread specification required for threaded rod used with Cinch Nut (per ANSI/ASME B1.1)	$^3/_8$ - 16 UNC-2A	$^1/_2$ - 13 UNC-2A	$^5/_8$ - 11 UNC-2A	$^3/_4$ - 10 UNC-2A	$^7/_8$ - 9 UNC-2A	1 – 8 UNC-2A	$1^1/_8$ - 7 UNC-2A	$1^1/_4$ - 7 UNC-2A	$1^3/_8$ - 6 UNC-2A	$1^1/_2$ - 6 UNC-2A
Maximum permissible F_u of the threaded rod used with the Cinch Nut [1] (lbf/in^2)	125,000	125,000	123,627	113,061	125,000	111,481	119,152	121,323	107,942	125,000
Maximum allowable demand load on Cinch Nut [2] (pounds) where F_u = 125,000 psi	5,177	9,204	14,067	16,942	28,187	29,283	42,337	54,190	51,093	82,835
Allowable load for Cinch Nut[3] (pounds)	5,177	9,204	14,223	18,731	28,187	32,834	44,415	55,832	60,106	82,835
Deflection at allowable load[4, 6], Δ_A (inches)	0.0157	0.0217	0.0187	0.0224	0.0234	0.0241	0.0233	0.0287	0.0268	0.0361
Device average travel and seating increment [5, 6], Δ_R (inches)	0.029	0.048	0.0514	0.0578	0.0506	0.0549	0.0524	0.0754	0.0804	0.0717

For **SI:** 1 pound = 4.448 N, 1 inch = 25.4 mm, 1 lbf/in^2 = 6.895 kPa.

[1]The specified minimum tensile strength, F_u, of the threaded rod used with the Cinch Nut must not exceed the tabulated F_u values, except as noted in footnote 2.

[2]When the demand load on the Cinch Nut does not exceed the tabulated loads in this row, the maximum permissible F_u of the threaded rod is 125,000 (lbf/in^2).

[3]Allowable load values are for Cinch Nuts only. The attached components (including anchors, tension rods, bearing plates, wood framing members, etc.) must be designed to resist design loads in accordance with the applicable code.

[4]Values of deflection at allowable load are for the Cinch Nut devices only. They do not include movement due to bolt elongation, wood compression, etc.

[5]The average travel and seating increment, Δ_R, is defined as the average of the movement required to cause incremental motion from a seated position and the opposite movement required to reseat the device after ratcheting.

[6]The device average travel and seating increment, Δ_R, and deflection at allowable load, Δ_A, describe the total movement of the device at allowable load, Δ_T, and are additive. For design loads, P_D, less than the allowable load, P_A, the total movement of the device is calculated as follows: $\Delta_T = \Delta_R + \Delta_A(P_D / P_A)$.

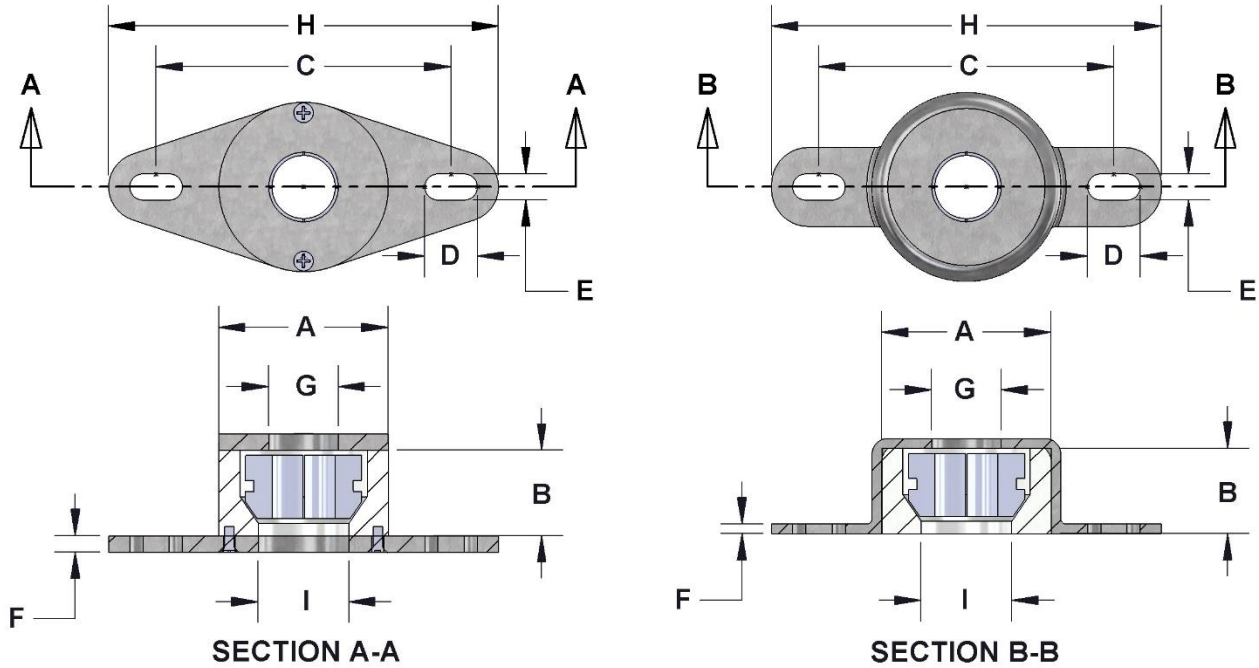

CNX CINCH NUT **CNXO CINCH NUT**

CNX and CNXO CINCH NUT DIMENSIONS (inches)

DIMENSION DESIGNATION	CNX3 CNXO3	CNX4 CNXO4	CNX5 CNXO5	CNX6 CNXO6	CNX7 CNXO7	CNX8 CNXO8	CNX9 CNXO9	CNX10	CNXO10	CNX11	CNXO11	CNX12	CNXO12
A	1.551	1.695	1.861	2.010	2.164	2.325	2.498	2.686		2.905		3.092	
B	0.854	0.868	0.881	1.015	1.150	1.288	1.430	1.555		1.703		1.828	
C	3.500	3.500	3.500	3.500	3.500	3.500	3.500	3.500	3.625	3.617	3.875	3.711	3.875
D	0.625	0.625	0.625	0.625	0.625	0.625	0.625	0.625	0.500	0.508	0.375	0.414	0.375
E	0.313	0.313	0.313	0.313	0.313	0.313	0.313	0.313		0.313		0.313	
F (CNX)	0.190*	0.190*	0.190*	0.190*	0.190*	0.190*	0.190*	0.190*		0.190*		0.190*	
F (CNXO)	0.110*	0.110*	0.110*	0.110*	0.110*	0.110*	0.110*	0.110*		0.110*		0.110*	
G	0.450	0.575	0.700	0.825	0.950	1.075	1.200	1.325		1.450		1.575	
H	4.625	4.625	4.625	4.625	4.625	4.625	4.625	4.625		4.625		4.625	
I	0.668	0.793	0.940	1.077	1.217	1.360	1.510	1.698		1.885		2.072	

* Minimum material thickness

FIGURE 1—CINCH NUT DIMENSIONS

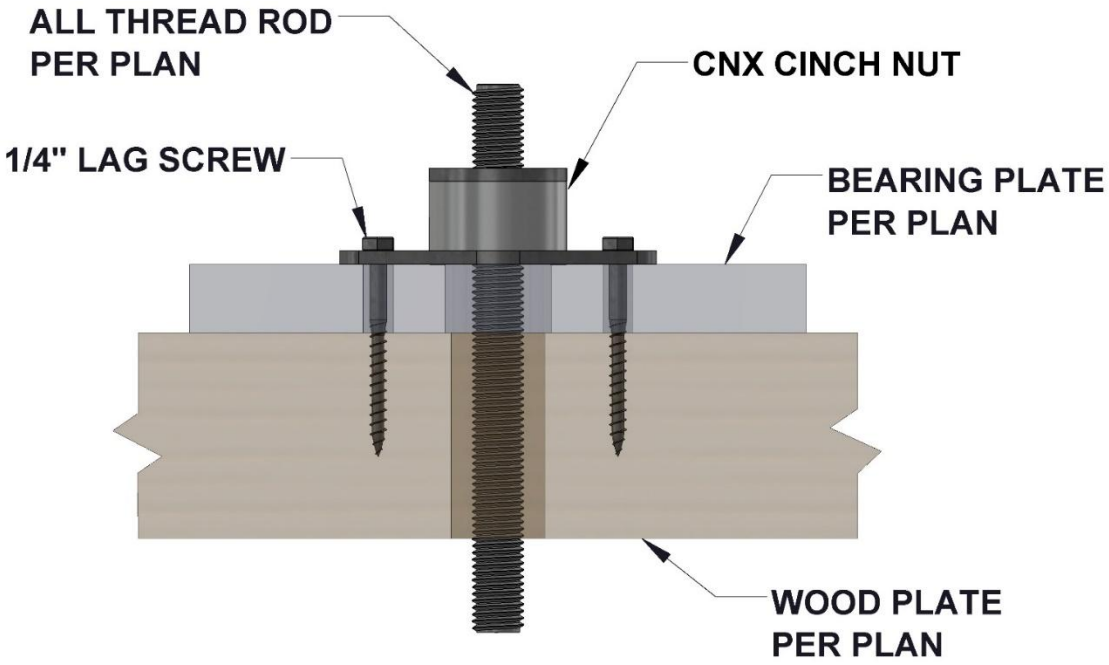

FIGURE 2—CNX CINCH NUT INSTALLATION DETAIL—PLATED SYSTEM

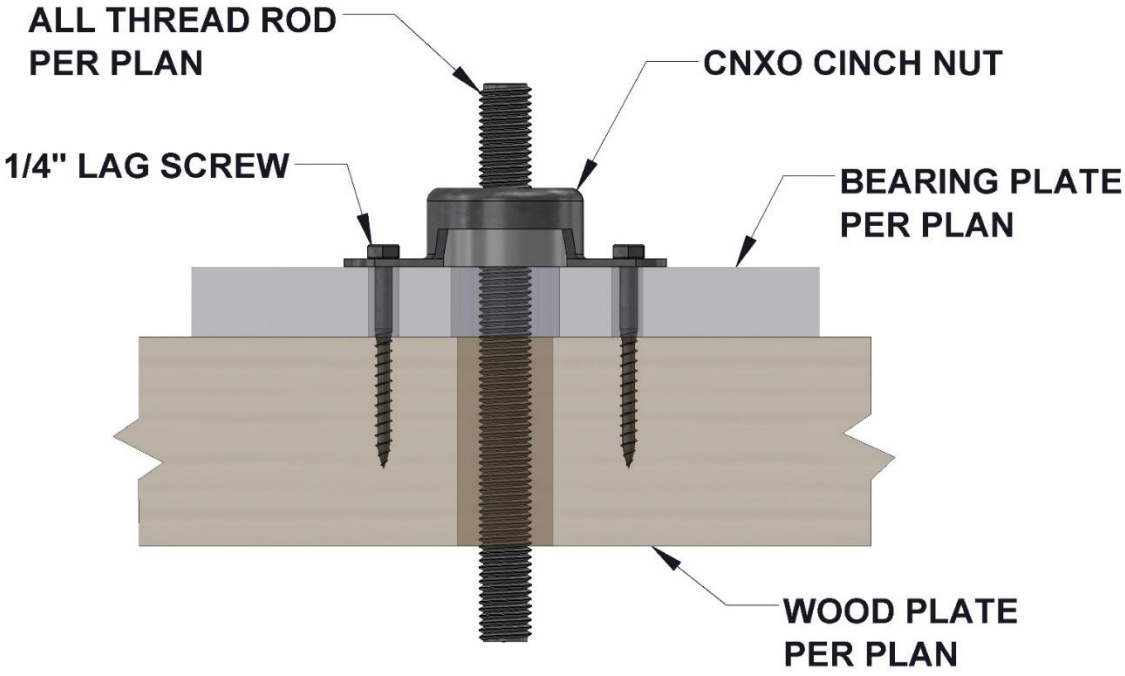

FIGURE 3—CNXO CINCH NUT INSTALLATION DETAIL—PLATED SYSTEM

TABLE 2—DIMENSIONS, ALLOWABLE LOADS AND DEFLECTION AT ALLOWABLE LOADS FOR THE PW3 SHRINKAGE COMPENSATION DEVICE

MODEL NUMBER	DIMENSIONS		FASTENER SCHEDULE[1,2,3]	ALLOWABLE LOAD (lbs)[4]		SEATING INCREMENT, Δ_R (inches)	APPLIED LOADS (lbs)	DEFLECTION AT APPLIED LOAD (inches)[5]
	D	H		0.42 ≤ SG < 0.5	SG ≥ 0.5			
PW3	3 3/8	1 1/8	1 – WSF	1195	1365	0.0351	600	0.0666
							800	0.0723
							1000	0.0781
							1200	0.0817
							1400	0.0849

For **SI**: 1 inch = 25.4 mm, 1 pound = 4.45 N.

[1]The MiTek WSF self-drilling floor-to-floor screw is described in ESR-2761.
[2]The PW3 compensates for up to 5/16 inch (8 mm) of wood shrinkage.
[3]The WSF screw must be installed through the center hole of the PW3 at an angle no greater than 5 degrees out of plumb. The WSF screw installs through the wall bottom plate, floor sheathing and wall cavity into the top plates of the wall below. The WSF screw is driven in until the head of the screw compresses the PW3 which releases the internal spring.
[4]The allowable load of the PW3 with WSF assembly is the lesser of the PW3 maximum allowable load and the adjusted allowable withdrawal load of the WSF screw.
[5]The deflection at applied load is the total movement of the device and includes the Seating Increment Δ_R. Interpolation of the deflection for applied loads between those listed is permitted. The tabulated deflections do not include movement attributed to the withdrawal and elongation of the WSF screw.

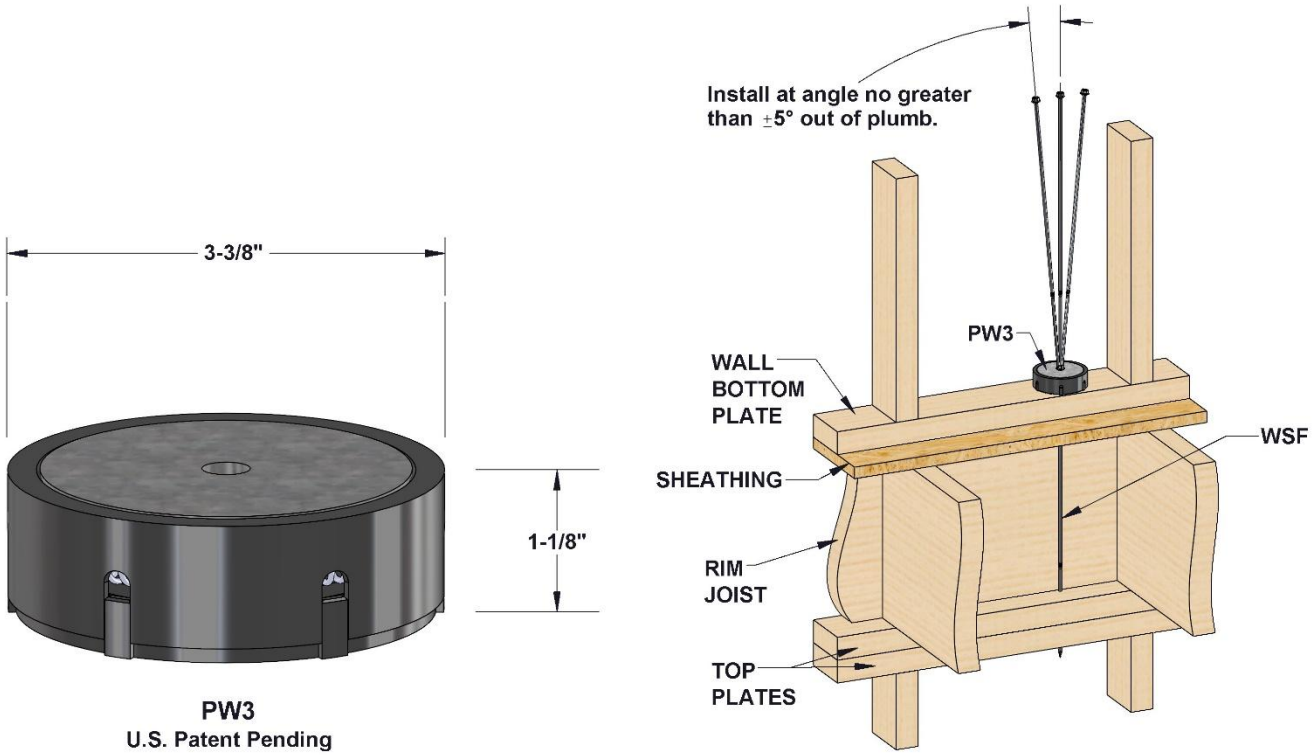

FIGURE 4—PW3 SHRINKAGE COMPENSATION DEVICE DIMENSIONS AND INSTALLATION DETAIL

DIVISION: 06 00 00—WOOD, PLASTICS AND COMPOSITES
Section: 06 05 23—Wood, Plastic, and Composite Fastenings

REPORT HOLDER:

MITEK® INC.

EVALUATION SUBJECT:

MITEK SHRINKAGE COMPENSATION DEVICES: CNX AND CNXO CINCH NUT™ AND PW3

1.0 REPORT PURPOSE AND SCOPE

Purpose:

The purpose of this evaluation report supplement is to indicate that Cinch Nut™ Shrinkage Compensation Device Models CNX3/CNXO3, CNX4/CNXO4, CNX5/CNXO5, CNX6/CNXO6, CNX7/CNXO7, CNX8/CNXO8, CNX9/CNXO9, CNX10/CNXO10, CNX11/CNXO11, and CNX12/CNXO12, and the PW3 Shrinkage Compensation Device , described in ICC-ES evaluation report ESR-2190, have also been evaluated for compliance with the codes noted below as adopted by the Los Angeles Department of Building and Safety (LADBS).

Applicable code editions:

- 2026 *City of Los Angeles Building Code* (LABC)
- 2026 *City of Los Angeles Residential Code* (LARC)

2.0 CONCLUSIONS

The Cinch Nut™ Shrinkage Compensation Device Models CNX3/CNXO3, CNX4/CNXO4, CNX5/CNXO5, CNX6/CNXO6, CNX7/CNXO7, CNX8/CNXO8, CNX9/CNXO9, CNX10/CNXO10, CNX11/CNXO11, and CNX12/CNXO12, and the PW3 Shrinkage Compensation Device, described in Sections 2.0 through 7.0 of the evaluation report ESR-2190, comply with the LABC Chapter 23, and the LARC, and are subjected to the conditions of use described in this supplement.

3.0 CONDITIONS OF USE

The Cinch Nut™ Shrinkage Compensation Device Models CNX3/CNXO3, CNX4/CNXO4, CNX5/CNXO5, CNX6/CNXO6, CNX7/CNXO7, CNX8/CNXO8, CNX9/CNXO9, CNX10/CNXO10, CNX11/CNXO11, and CNX12/CNXO12, and the PW3 Shrinkage Compensation Device described in this evaluation report supplement must comply with all the following conditions:

- All applicable sections in the evaluation report ESR-2190.
- The design, installation, conditions of use and identification of the Cinch Nut™ Shrinkage Compensation Devices and PW3 Shrinkage Compensation Device are in accordance with the 2024 *International Building Code*® (IBC) or 2024 *International Residential Code*® (IRC) provisions, as applicable, noted in the evaluation report ESR-2190.
- The design, installation and inspection are in accordance with additional requirements of LABC Chapters 16 and 17, as applicable.
- Under the LARC, an engineered design in accordance with LARC Section R301.1.3 must be submitted.

This supplement expires concurrently with the evaluation report, reissued June 2026 and revised September 2026.

ICC-ES Evaluation Reports are not to be construed as representing aesthetics or any other attributes not specifically addressed, nor are they to be construed as an endorsement of the subject of the report or a recommendation for its use. There is no warranty by ICC Evaluation Service, LLC, express or implied, as to any finding or other matter in this report, or as to any product covered by the report.

Copyright © 2026 ICC Evaluation Service, LLC. All rights reserved.

DIVISION: 06 00 00—WOOD, PLASTICS AND COMPOSITES
Section: 06 05 23—Wood, Plastic, and Composite Fastenings

REPORT HOLDER:

MITEK® INC.

EVALUATION SUBJECT:

MITEK SHRINKAGE COMPENSATION DEVICES: CNX AND CNXO CINCH NUT™ AND PW3

1.0 REPORT PURPOSE AND SCOPE

Purpose:

The purpose of this evaluation report supplement is to indicate that the Cinch Nut™ Shrinkage Compensation Device: Models CNX3/CNXO3, CNX4/CNXO4, CNX5/CNXO5, CNX6/CNXO6, CNX7/CNXO7, CNX8/CNXO8, CNX9/CNXO9, CNX10/CNXO10, CNX11/CNXO11 and CNX12/CNXO12, and the PW3 Shrinkage Compensation Device, described in ICC-ES evaluation report ESR-2190, has also been evaluated for compliance with the codes noted below.

Applicable code editions:

- 2025 and 2022 *California Building Code* (CBC)

For evaluation of applicable chapters adopted by the California Office of Statewide Health Planning and Development (OSHPD) AKA: California Department of Health Care Access and Information (HCAI) and the Division of State Architect (DSA), see Sections 2.1.1 and 2.1.2 below.

- 2025 and 2022 *California Residential Code* (CRC)

2.0 CONCLUSIONS

2.1 CBC:

The Cinch Nut™ Shrinkage Compensation Device: Models CNX3/CNXO3, CNX4/CNXO4, CNX5/CNXO5, CNX6/CNXO6, CNX7/CNXO7, CNX8/CNXO8, CNX9/CNXO9, CNX10/CNXO10, CNX11/CNXO11 and CNX12/CNXO12, and the PW3 Shrinkage Compensation Device, described in Sections 2.0 through 7.0 of the evaluation report ESR-2190, complies with CBC Chapter 23, provided the design and installation are in accordance with the 2024 and 2021 *International Building Code*® (IBC) provisions noted in the evaluation report and the additional requirements of the CBC Chapters 16, 17 and 23, as applicable.

2.1.1 OSHPD:

OSHPD requirements as indicated in the CBC are beyond the scope of this supplement.

2.1.2 DSA:

DSA requirements as indicated in the CBC are beyond the scope of this supplement.

2.2 CRC:

The Cinch Nut™ Shrinkage Compensation Device: Models CNX3/CNXO3, CNX4/CNXO4, CNX5/CNXO5, CNX6/CNXO6, CNX7/CNXO7, CNX8/CNXO8, CNX9/CNXO9, CNX10/CNXO10, CNX11/CNXO11 and CNX12/CNXO12, and the PW3 Shrinkage Compensation Device, described in Sections 2.0 through 7.0 of the evaluation report ESR-2190, complies with the CRC Section R301.1.3, provided the design and installation are in accordance with the 2024 and 2021 *International Residential Code*® (IBC) provisions noted in the evaluation report.

This supplement expires concurrently with the evaluation report, reissued June 2026 and revised September 2026.

ICC-ES Evaluation Reports are not to be construed as representing aesthetics or any other attributes not specifically addressed, nor are they to be construed as an endorsement of the subject of the report or a recommendation for its use. There is no warranty by ICC Evaluation Service, LLC, express or implied, as to any finding or other matter in this report, or as to any product covered by the report.

Copyright © 2026 ICC Evaluation Service, LLC. All rights reserved.

DIVISION: 06 00 00—WOOD, PLASTICS AND COMPOSITES
Section: 06 05 23—Wood, Plastic, and Composite Fastenings

REPORT HOLDER:

MITEK® INC.

EVALUATION SUBJECT:

MITEK SHRINKAGE COMPENSATION DEVICES: CNX AND CNXO CINCH NUT™ AND PW3

1.0 REPORT PURPOSE AND SCOPE

Purpose:

The purpose of this evaluation report supplement is to indicate that Cinch Nut™ Shrinkage Compensation Device: Models CNX3/CNXO3, CNX4/CNXO4, CNX5/CNXO5, CNX6/CNXO6, CNX7/CNXO7, CNX8/CNXO8, CNX9/CNXO9, CNX10/CNXO10, CNX11/CNXO11 and CNX12/CNXO12, and the PW3 Shrinkage Compensation Device, described in ICC-ES evaluation report ESR-2190, has also been evaluated for compliance with the codes noted below.

Applicable code editions:

- 2026 and 2023 *Florida Building Code—Building*
- 2026 and 2023 *Florida Building Code—Residential*

2.0 CONCLUSIONS

The Cinch Nut™ Shrinkage Compensation Device: Models CNX3/CNXO3, CNX4/CNXO4, CNX5/CNXO5, CNX6/CNXO6, CNX7/CNXO7, CNX8/CNXO8, CNX9/CNXO9, CNX10/CNXO10, CNX11/CNXO11 and CNX12/CNXO12, and the PW3 Shrinkage Compensation Device, described in Sections 2.0 through 7.0 of ICC-ES evaluation report ESR-2190, complies with the *Florida Building Code—Building* and the *Florida Building Code—Residential.* The design requirements must be determined in accordance with the *Florida Building Code—Building* or the *Florida Building Code—Residential,* as applicable. The installation requirements noted in ICC-ES evaluation report ESR-2190 for the 2024 and 2021 *International Building Code®* meet the requirements of the *Florida Building Code—Building* or the *Florida Building Code—Residential,* as applicable, with the following condition:

a) Use of the Cinch Nut™ and PW3 Shrinkage Compensation Device in contact with preservative-treated and fire-retardant-treated wood is outside the scope of ESR-2190. Requirements for compliance with Section 2304.10.5 of the *Florida Building Code—Building* and Section R317.3 of the *Florida Building Code—Residential* must be as indicated in a current ICC-ES evaluation report issued to the chemical treatment manufacturer. If the evaluation report does not contain information on the adjustments, the chemical manufacturer must be contacted for this information.

b) For use within 3,000 feet of a saltwater coastline under the 2026 *Florida Building Code—Building* or the 2026 *Florida Building Code—Residential*, fasteners and connectors must comply with Section 1711 and Table 1711.1 of the 2026 *Florida Building Code—Building* or Section R332 and Table R332.1 of the 2026 *Florida Building Code—Residential*, as applicable.

Use of the Cinch Nut™ Shrinkage Compensation Device: Models CNX3/CNXO3, CNX4/CNXO4, CNX5/CNXO5, CNX6/CNXO6, CNX7/CNXO7, CNX8/CNXO8, CNX9/CNXO9, CNX10/CNXO10, CNX11/CNXO11 and CNX12/CNXO12, and the PW3 Shrinkage Compensation Device has also been found to be in compliance with the High-Velocity Hurricane Zone provisions of the *Florida Building Code—Building* and the *Florida Building Code—Residential*, with the following condition:

a) For anchorage to wood members, the connection subject to uplift must be designed for no less than 700 pounds (3114 N).

For products falling under Florida Rule 61G20-3, verification that the report holder's quality assurance program is audited by a quality assurance entity approved by the Florida Building Commission for the type of inspections being conducted is the responsibility of an approved validation entity (or the code official when the report holder does not possess an approval by the Commission). Florida Rule 61G20-3 is applicable to products and/or systems which comprise the building envelope and structural frame for compliance with the structural requirements of the Florida Building Code.

This supplement expires concurrently with the evaluation report, reissued June 2026 and revised September 2026.

ICC-ES Evaluation Reports are not to be construed as representing aesthetics or any other attributes not specifically addressed, nor are they to be construed as an endorsement of the subject of the report or a recommendation for its use. There is no warranty by ICC Evaluation Service, LLC, express or implied, as to any finding or other matter in this report, or as to any product covered by the report.

Copyright © 2026 ICC Evaluation Service, LLC. All rights reserved.